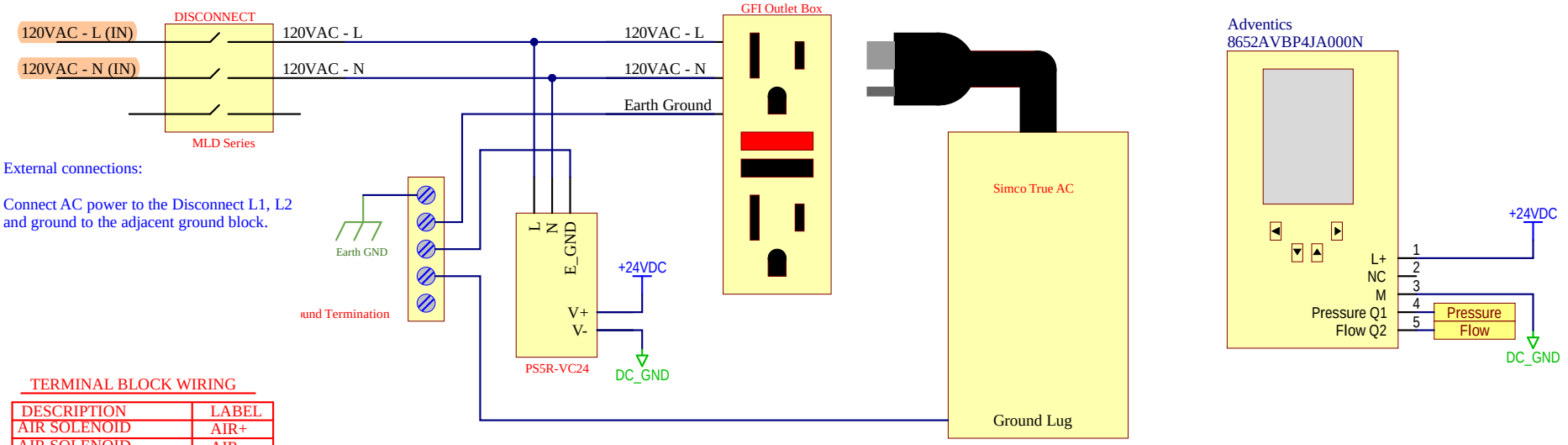

External connections:

Connect AC power to the Disconnect L1, L2 and ground to the adjacent ground block.

TERMINAL BLOCK WIRING

DESCRIPTION	LABEL
AIR SOLENOID	AIR+
AIR SOLENOID	AIR-
AIR SOLENOID	⏚
PRESSURE SENSOR	PRS
FLOW SENSOR	FLO
-24VDC	DC-
-24VDC	DC-
-24VDC	DC-
-24VDC	DC-
-24VDC	DC-
+24VDC	DC+
+24VDC	DC+
+24VDC	DC+
+24VDC	DC+
+24VDC	DC+

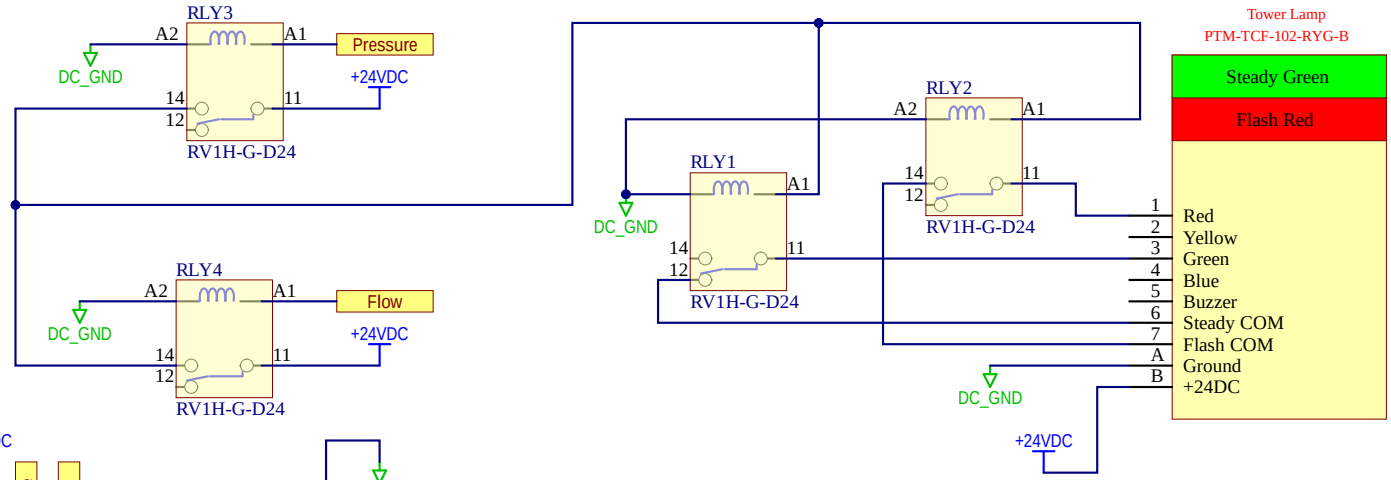

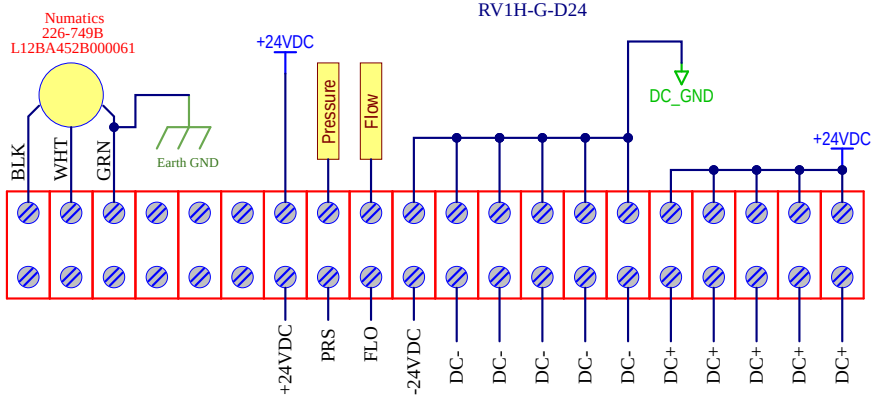

TBR Job # 32042

Title	Pressure & Flow Sensor Panel
Customer	Entech Fabrication
Address	14002 Harrison Ave, Posen, IL 60469
Drawing Status	In House Use Only
Revision	1
Date Printed	3/11/2021
Sheet	1 of 1
Size	A
File	C:\Possible Projects\Entech\FlowPrrssure\FlowPressure With True AC Supply.SchDoc

Cannot open file C:\Altium Library\Templates\Glen\tbr_dxp_logo_sm.jpg. File does not exist.

Drawn by Glen